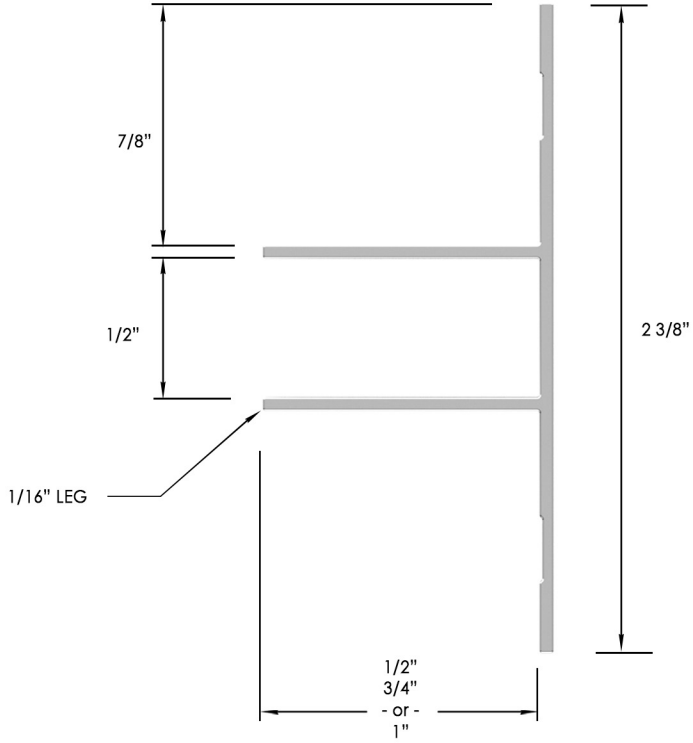

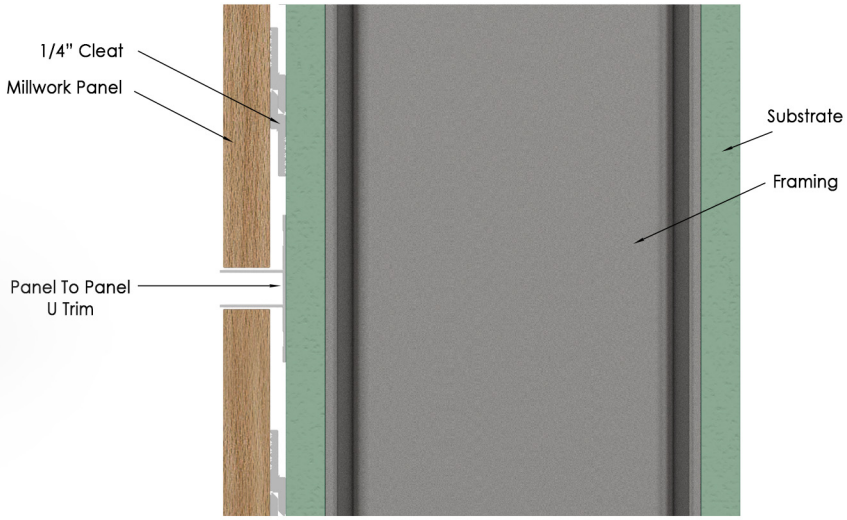

Decorative
Wall
Panels *Systems*

Panel to Panel U Trim - Perspectives
Available for 1/2", 3/4" & 1" Panels
Custom Anodized and Powder Coated Finishes Available
DWPanels.com

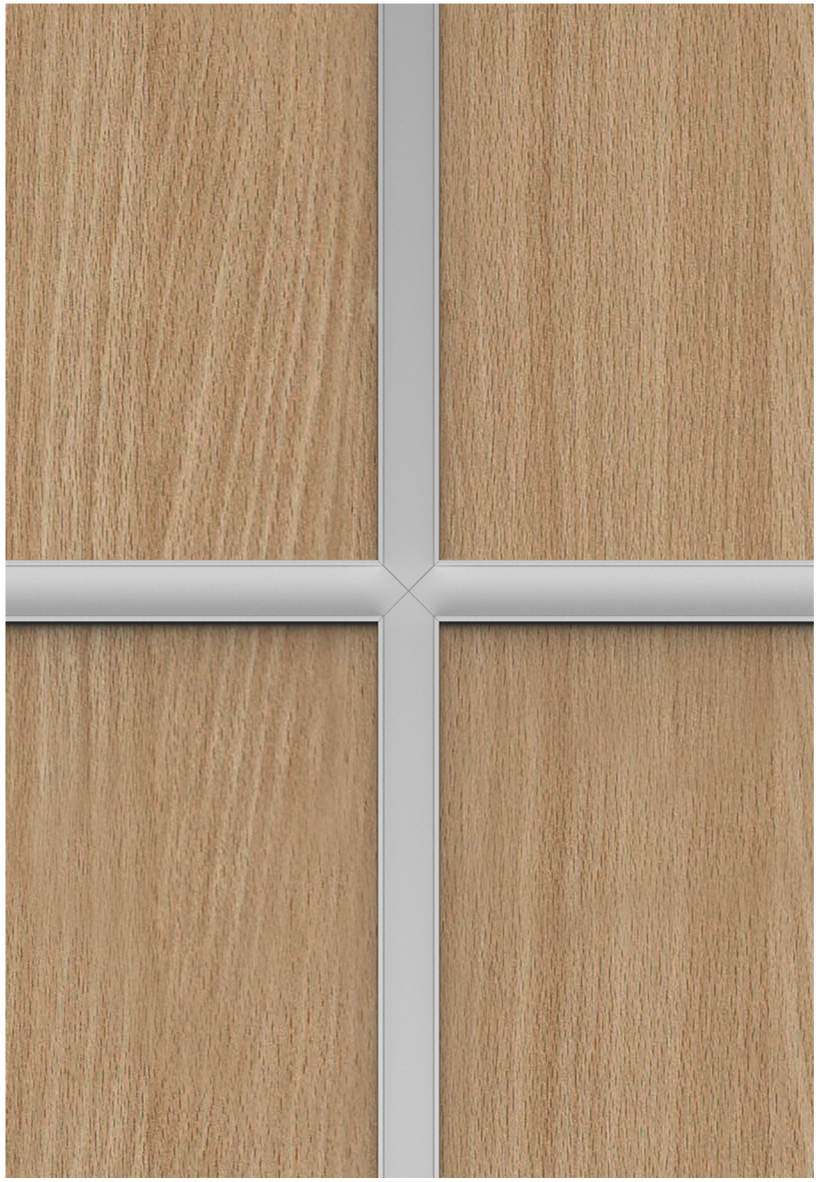

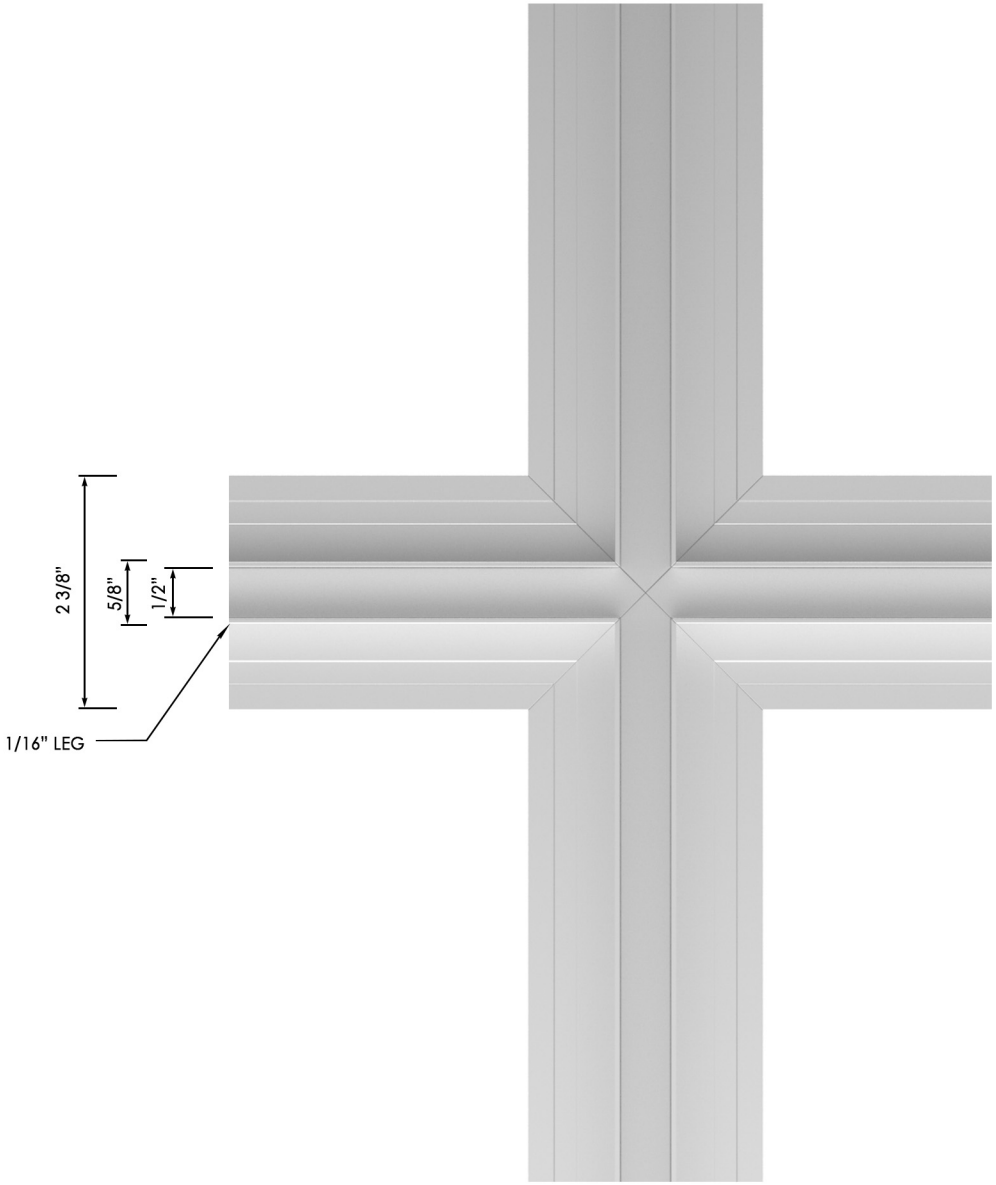

Decorative
Wall
Panels *Systems*

Panel to Panel U Trim - Fabricated Intersection
Available for 1/2", 3/4" & 1" Panels
Custom Anodized and Powder Coated Finishes Available
DWPanels.com

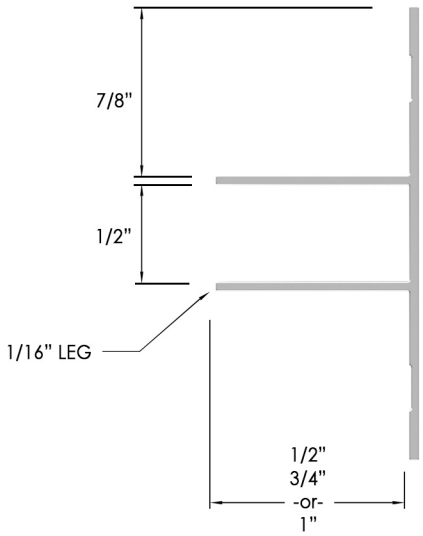

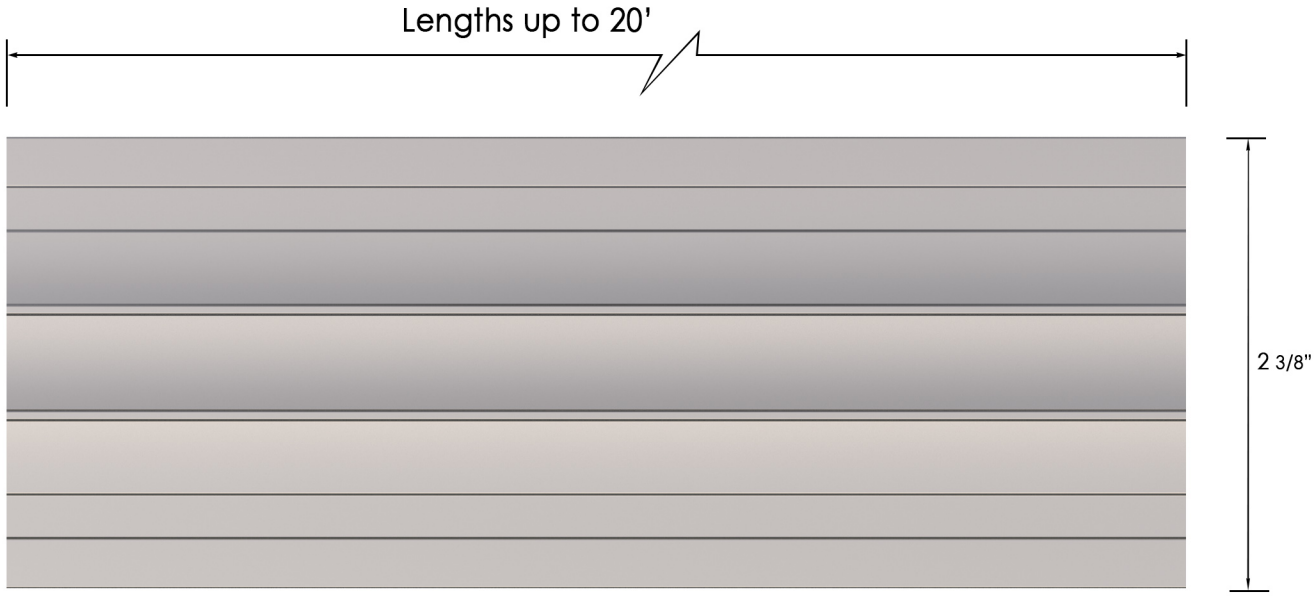

PANEL TO PANEL U TRIM
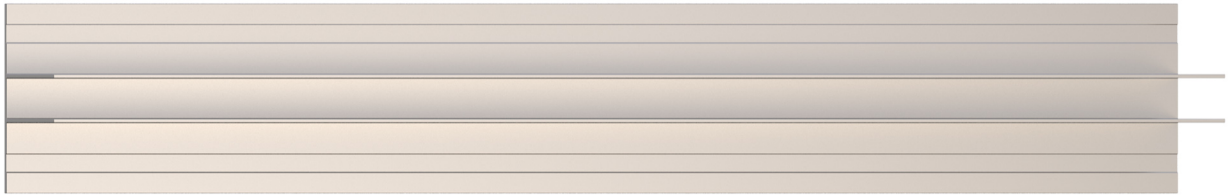
Panel Size	Product Number
1/2"	PTP-U-50
3/4"	PTP-U-75
1"	PTP-U-100