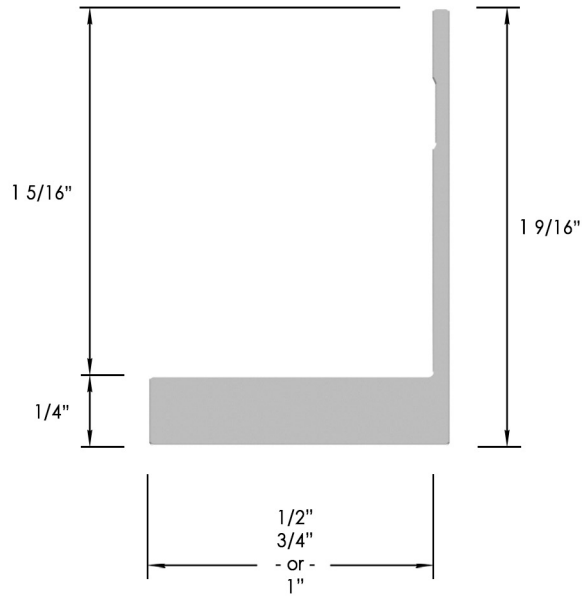

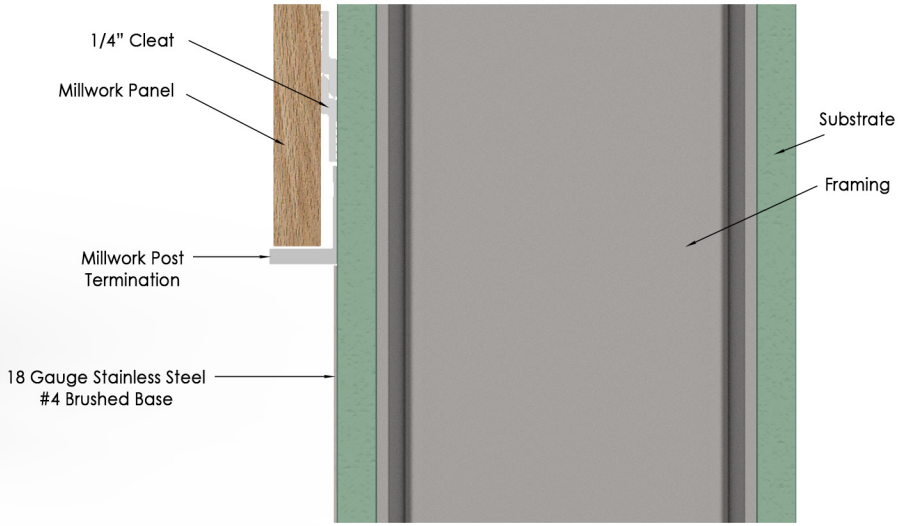

Decorative
Wall
Panels *Systems*

Panel T Edge - Perspectives
Available for 1/2", 3/4" & 1" Panels
Custom Anodized and Powder Coated Finishes Available
DWPanels.com

Decorative
Wall
Panels *Systems*

Panel T Edge - Fabricated Intersection
Available for 1/2", 3/4" & 1" Panels
Custom Anodized and Powder Coated Finishes Available
DWPanels.com

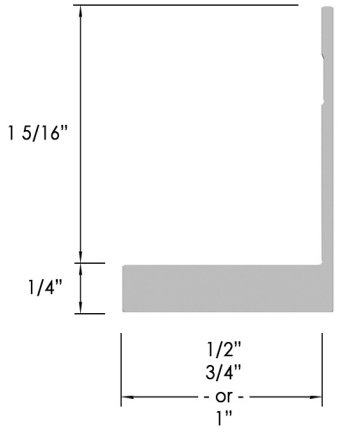

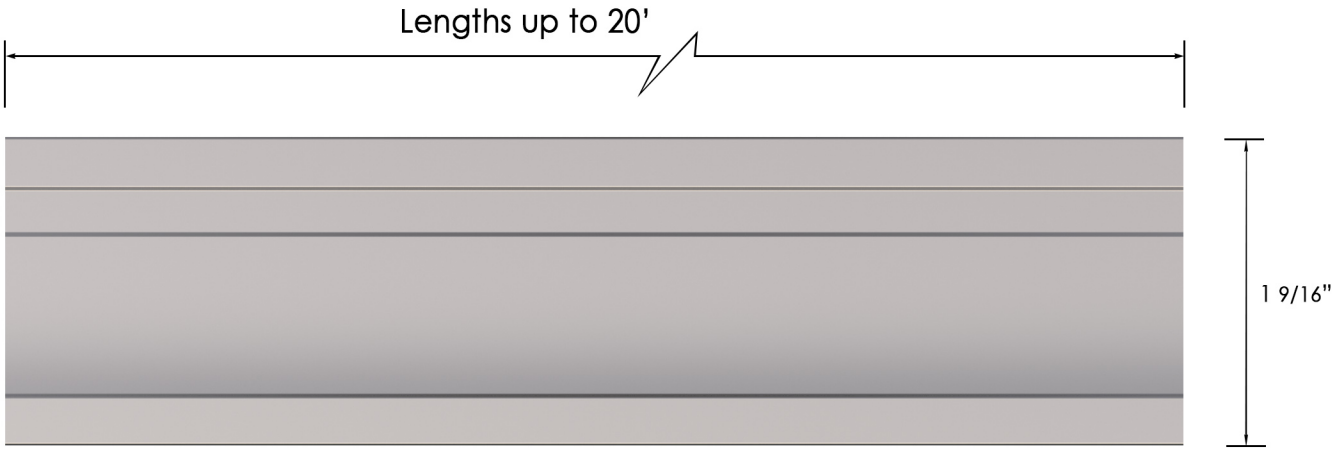

PANEL T EDGE	
Panel Size	**Product Number**
1/2"	PTE-50
3/4"	PTE-75
1"	PTE-100

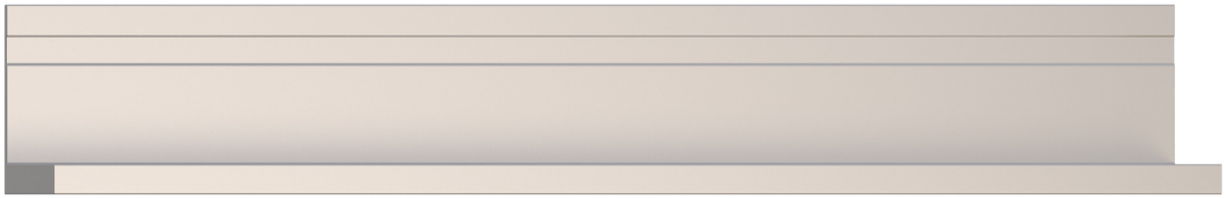

Decorative
Wall
Panels *Systems*

Panel T Edge - Details
Available for 1/2", 3/4" & 1" Panels
Custom Anodized and Powder Coated Finishes Available
DWPanels.com