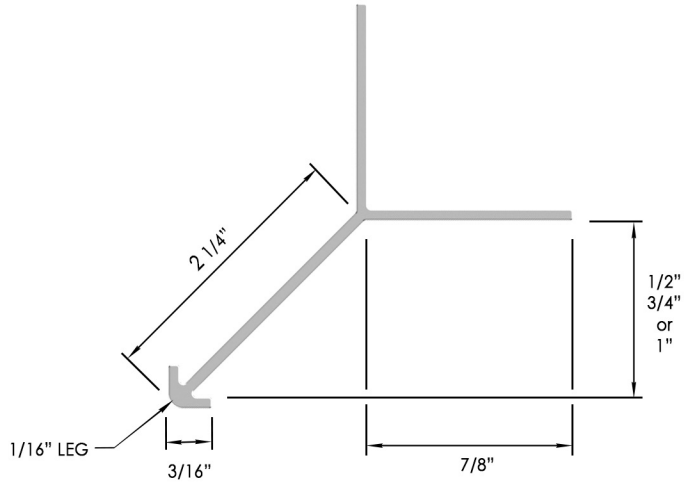

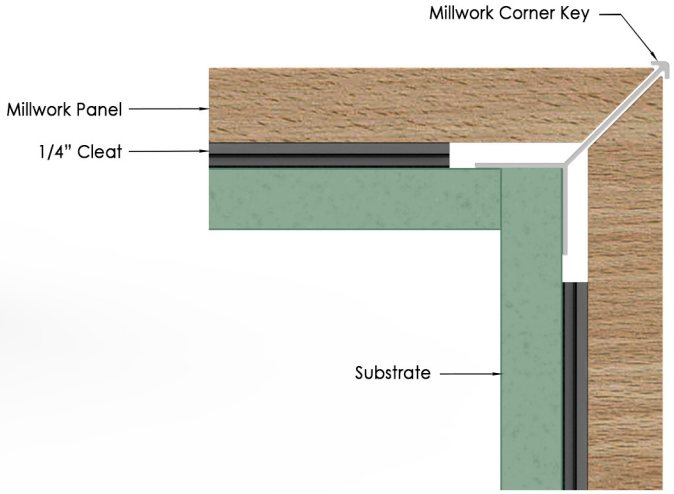

Decorative
Wall
Panels *Systems*

Outside T Corner With Lip - Perspectives
Available for 1/2", 3/4" & 1" Panels
Custom Anodized and Powder Coated Finishes Available
DWPanels.com

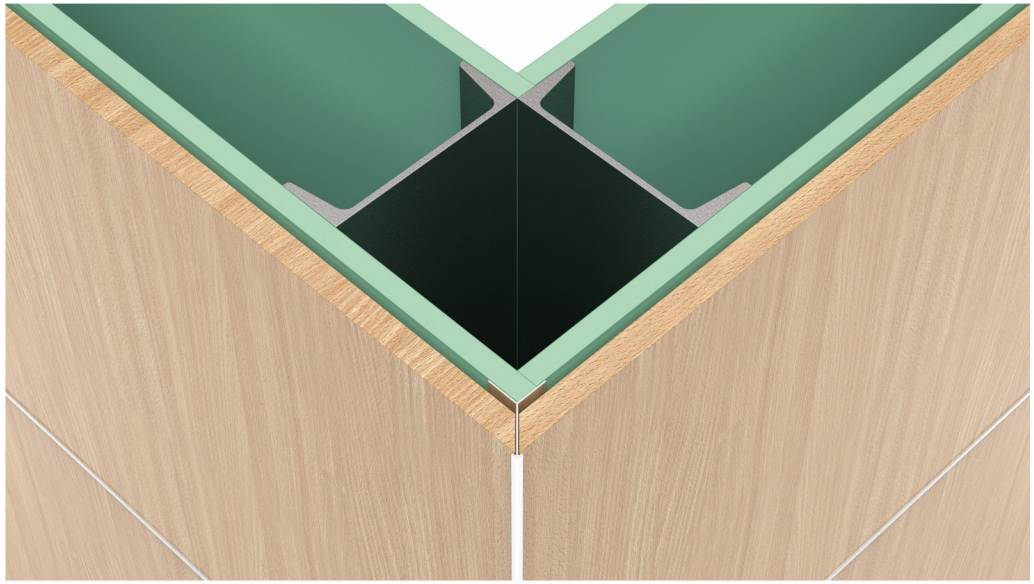

Decorative
Wall
Panels *Systems*

Outside T Corner With Lip - Perspectives
Available for 1/2", 3/4" & 1" Panels
Custom Anodized and Powder Coated Finishes Available
DWPanels.com

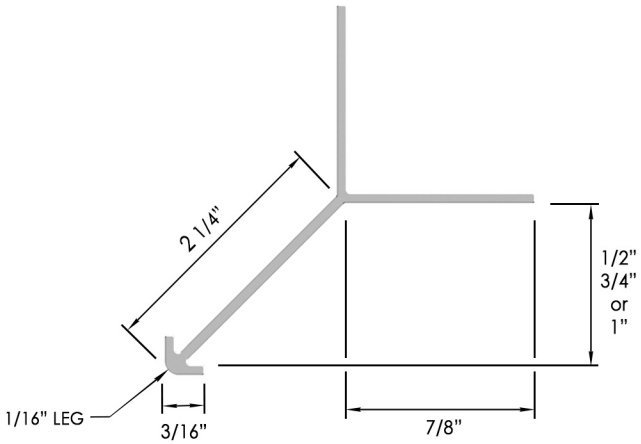

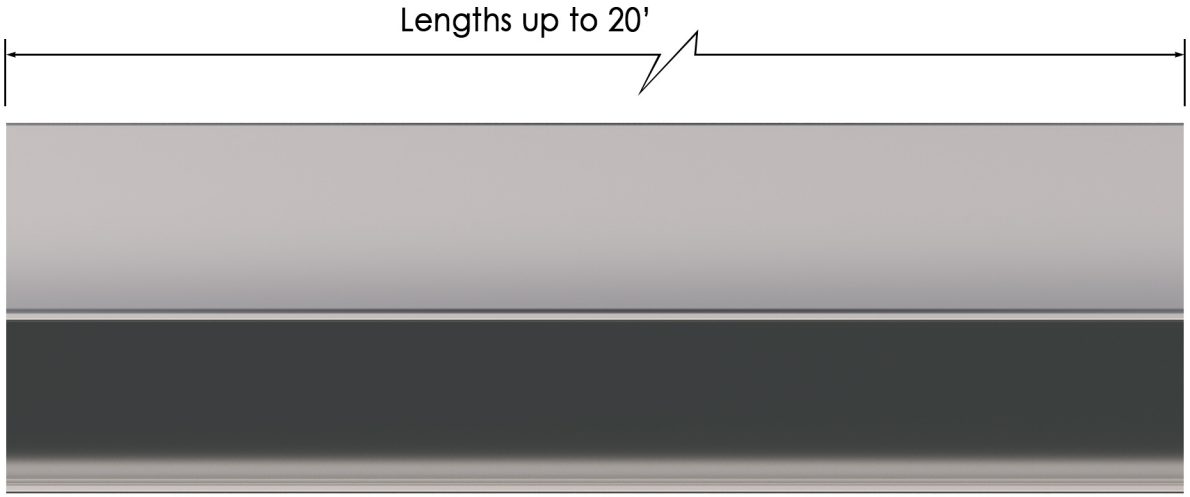

OUTSIDE T CORNER WITH LIP

Panel Size	Product Number
1/2"	OC-T-WL-50
3/4"	OC-T-WL-75
1"	OC-T-WL-100