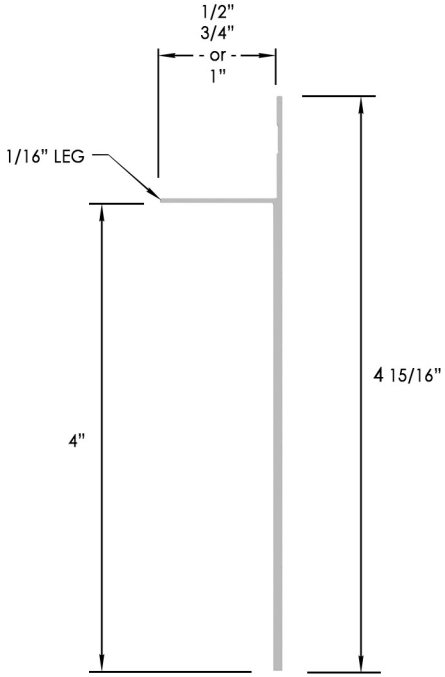

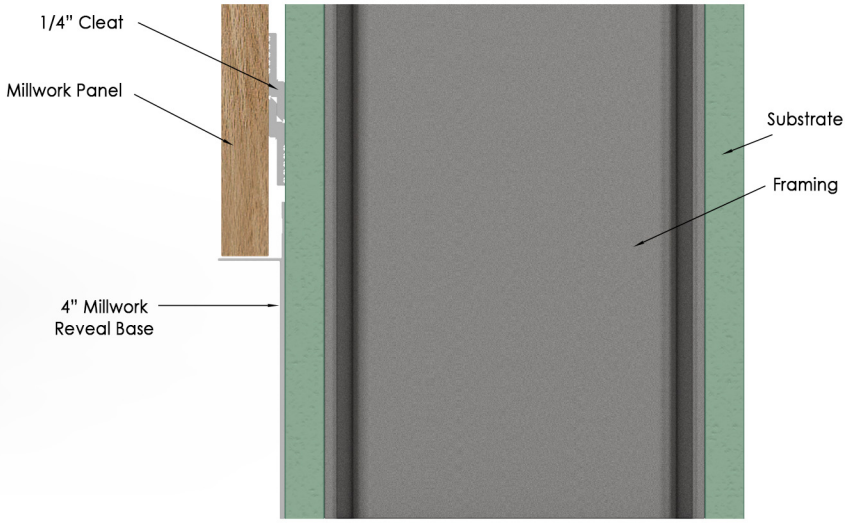

Decorative
Wall
Panels *Systems*

4" Base - Perspectives
Available for 1/2", 3/4" & 1" Panels
Custom Anodized and Powder Coated Finishes Available
DWPanels.com

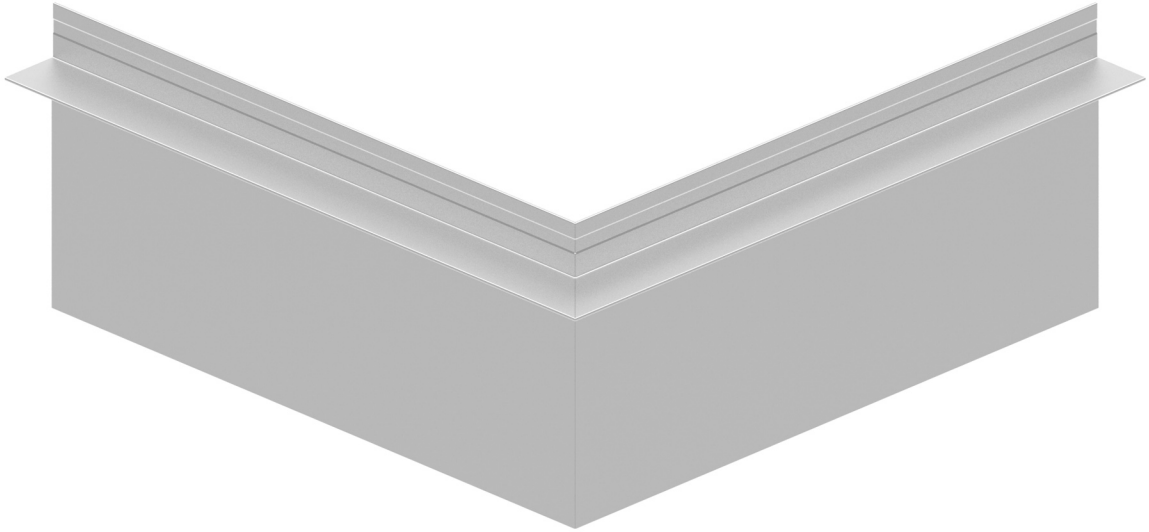

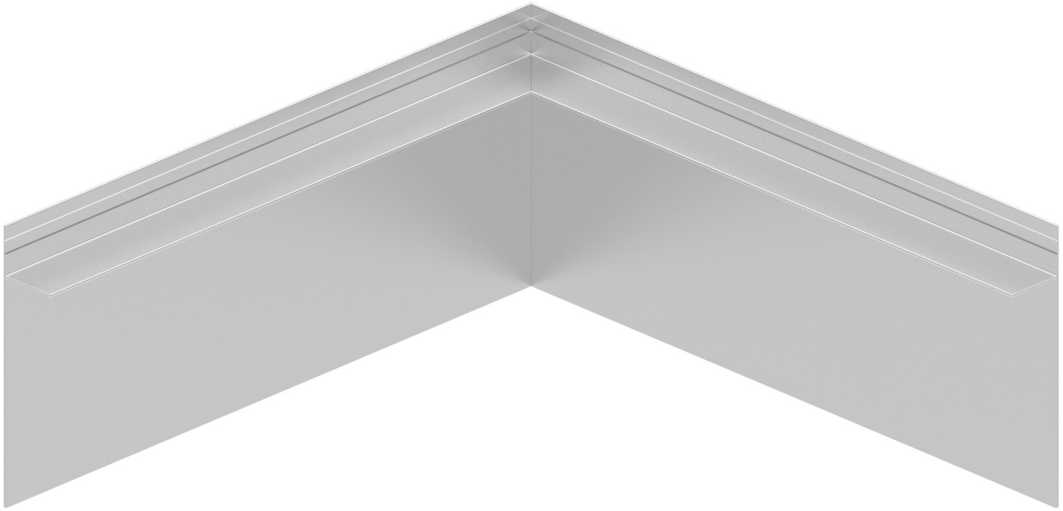

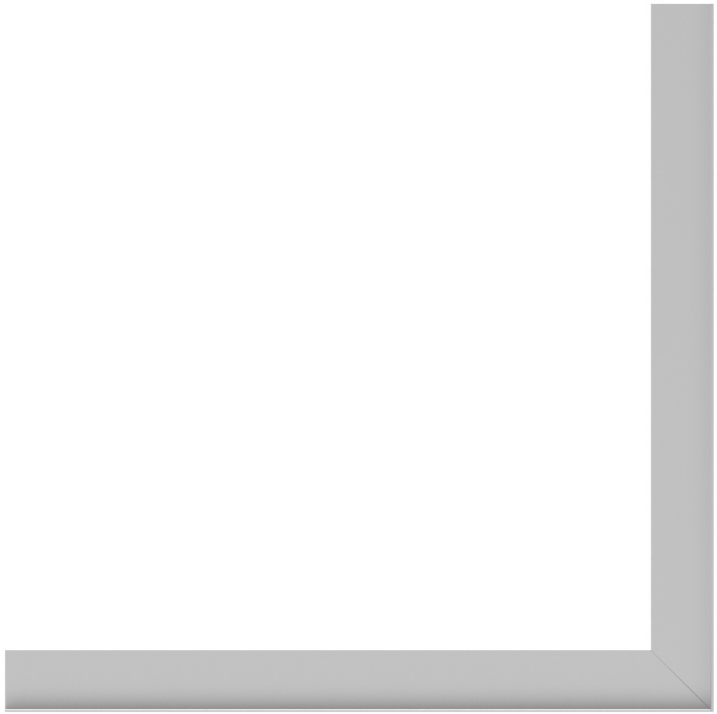

Decorative
Wall
Panels *Systems*

4" Base - Fabricated Intersection
Available for 1/2", 3/4" & 1" Panels
Custom Anodized and Powder Coated Finishes Available
DWPanels.com

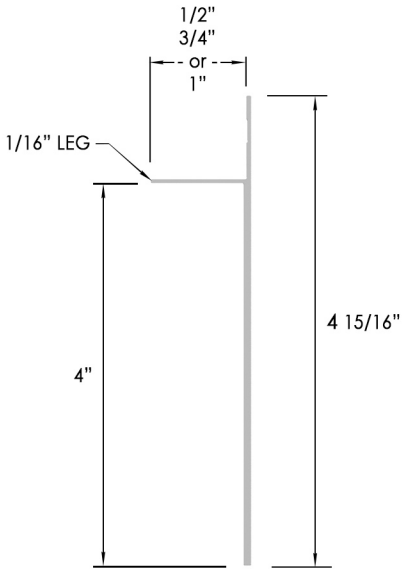

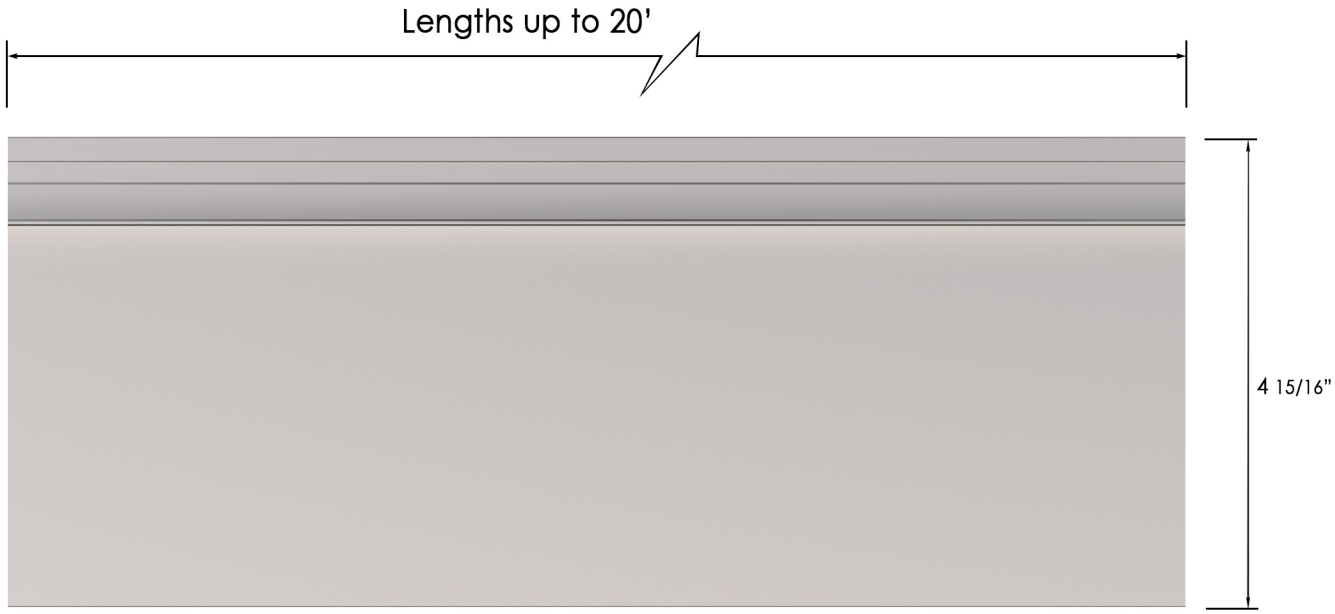

4" BASE	
Panel Size	**Product Number**
1/2"	4B-50
3/4"	4B-75
1"	4B-100

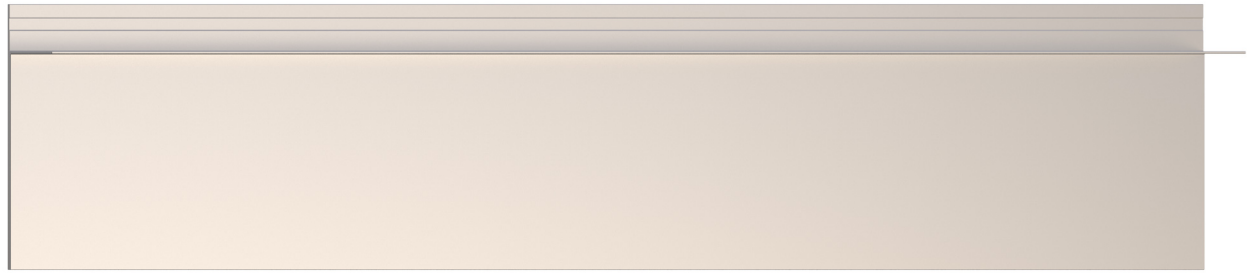

Decorative
Wall
Panels *Systems*

4" Base - Details
Available for 1/2", 3/4" & 1" Panels
Custom Anodized and Powder Coated Finishes Available
DWPanels.com